VENTILATOR FILTER UNIT
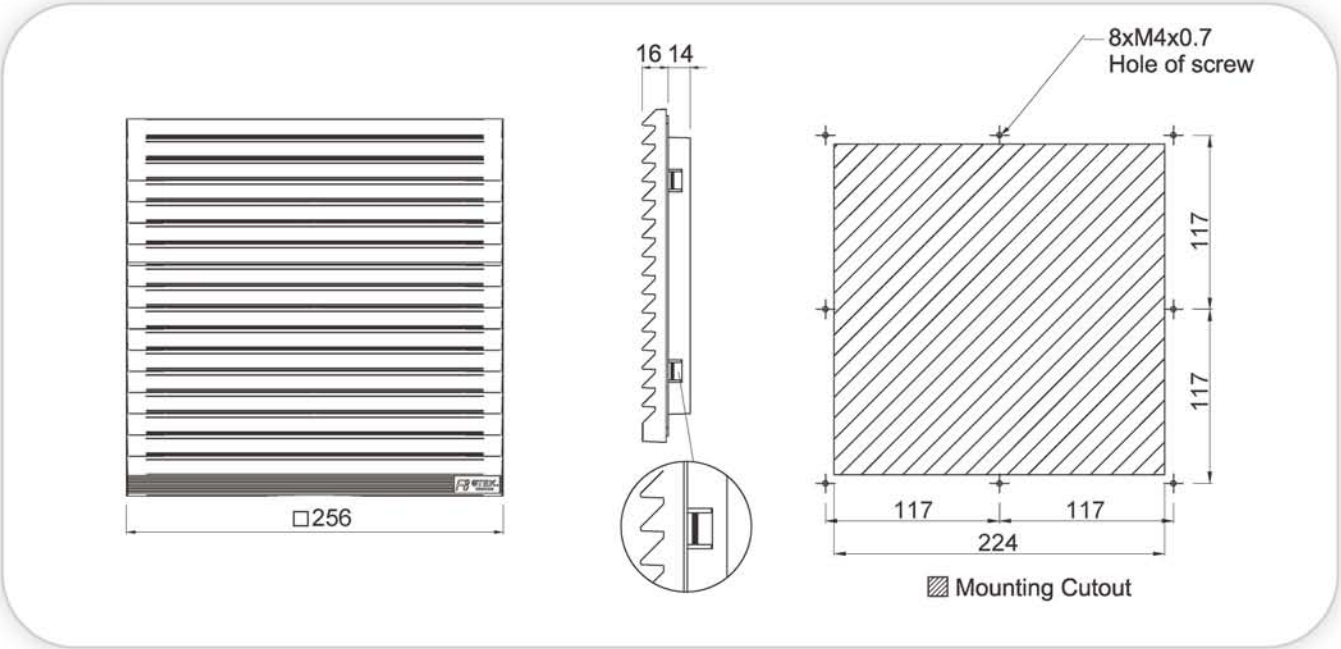
Model	F8
Dimension	256x256x30mm (WxHxD)
Main material	UL and RoHS approved material ABS resin
Flexural Strength	640 kg/cm^2
IZOD Impact	24 kg-cm/cm
Flammability UL-94	2.1mm, V-0 (File No E56070) 2.5mm, 5VA (UL & C-UL)
Filter material	Nylon fiber, Flame resistant, Temperature resistance 100℃ Moisture resistance 100%RH
Max.Air Volume	2.0 M/SEC
Filter mat quality	Dust 560g/m^2、Capture rate 80% (Weight method) Dust particles Φ5μm and above
Air Volume	1020 m^3/h
Protection Class	IP54
Operating Twmperature	-10℃ ~ +85℃
Weight	1.0kg/PC
Package Quantity	20PCS/Box N.W.: 11kg G.W.:11.5kg
Packing Size	630x270x273mm